THE GAS COMPANY.IE
Call The Showroom : 01 9695000

belling

INNOVATION FOR GENERATIONS SINCE 1912

belling

INSIDE EVERY GREAT HOME

COOKING • REFRIGERATION • DISHWASHING • LAUNDRY

YouTube

www.belling.ie

2020/21

BENEFITS OF INDUCTION TECHNOLOGY

THE GAS COMPANY.IE
Call The Showroom : 01 9695000

Smarter Faster Safer Greener

Smarter:
Intuitive technology that helps you achieve perfect results

- Warming zone (90cm models).
- Touch control hob.
- Digital power display.
- Hob timer. A timer and alarm system that tells you when your selected time has elapsed.

Faster:
Reaches the required temperature faster

- Induction technology. Nearly twice as fast as a gas hob and 30% faster than a ceramic hob.
- The hob's automatic heat up function will initially heat up to its highest temperature before dropping to the selected setting. This really speeds up the heating process, ideal for cooking pasta.
- Power boost. Draws additional power when required, perfect for wok cooking.

Safer:
Added peace of mind

- Safety shutdown function. If left unattended for a long period, all cook zones on the hob are turned off safely.
- Child lock. Disables all of the hob's controls for added safety.
- Pan overheat sensor. If left unattended, the hob automatically shuts down before a dangerous temperature is reached.
- Pan detection function. This means the hob will not function until a suitable pan is placed on the ring.

Greener:
The most energy efficient way to cook

- Induction technology. Approximately 30% more efficient than a gas hob and 25% more than a ceramic hob.
- Ceramic finish. This is easy to wipe-clean, meaning that spillages don't burn onto the surface.

COOKCENTRE

FARMHOUSE

RANGE COOKERS

THE GAS COMPANY.IE
Call The Showroom : 01 9695000

900mm Farmhouse Range Cooker

- Dual Fuel Model Fitted with 5 Burners including 4kW Wok Burner
- Enamelled Cast Iron Pot Supports
- Separate Variable Electric Grill
- 58 Litre* Programmable Main Fan
- 86 Litre* Tall Fan Oven
- Internal Oven Lights
- Easy Clean Enamel Interiors
- Dual Fuel Models are Factory Fitted with Natural Gas Jets LPG (Bottle Gas) Jets are Supplied
- H:895mm W:900mm D:600mm

ALL ELECTRIC VERSIONS HAVE A CERAMIC HOB WITH 5 ZONES
INDUCTION VARIANT HAS 4 COOKING ZONES PLUS WARMING ZONE

DUAL FUEL	ELECTRIC	INDUCTION
BLACK FH90DFTBK	BLACK FH90EBK	BLACK FH90EIBLK
CREAM FH90DFTCR	CREAM FH90ECR	CREAM FH90EICRM
RRP €1,499.95	**RRP €1,499.95**	**RRP €1,699.95**

FREE 2 YEAR PARTS & LABOUR

AA ENERGY RATING

1000mm Farmhouse Range Cooker

- Dual Fuel Model Fitted with 7 Burners Including 4kW Wok Burner
- Enamelled Cast Iron Pot Supports
- Separate Variable Electric Grill
- 58 Litre* Convectional Oven
- 64 Litre* Programmable Main Fan Oven
- Storage Compartment
- Internal Oven Lights
- Easy Clean Enamel
- Dual Fuel Models are Factory Fitted with Natural Gas Jets LPG (Bottle Gas) Jets are Supplied
- H:895mm W:1000mm D:600mm

ALL ELECTRIC VERSIONS HAVE A CERAMIC HOB WITH 6 ZONES
INDUCTION VARIANT HAS 5 INDUCTION ZONES

DUAL FUEL	ELECTRIC	INDUCTION
BLACK FH100DFTBK	BLACK FH100EBK	BLACK FH100EIBLK
CREAM FH100DFTCR	CREAM FH100ECR	CREAM FH100EICRM
RRP €1,599.95	**RRP €1,599.95**	**RRP €1,799.95**

FREE 2 YEAR PARTS & LABOUR

AA ENERGY RATING

1100mm Farmhouse Range Cooker

- Dual Fuel Model Fitted with 7 Burners Including 4kW Wok Burner
- Enamelled Cast Iron Pot Supports
- Separate Variable Electric Grill
- 58 Litre* Convectional Oven
- 64 Litre* Programmable Main Fan Oven
- Storage Compartment
- Internal Oven Lights
- Easy Clean Enamel
- Dual Fuel Models are Factory Fitted with Natural Gas Jets LPG (Bottle Gas) Jets are Supplied
- H:895mm W:1100mm D:600mm

ALL ELECTRIC VERSIONS HAVE A CERAMIC HOB WITH 6 ZONES
INDUCTION VARIANT HAS 5 INDUCTION ZONES

DUAL FUEL	ELECTRIC	INDUCTION
BLACK FH110DFTBK	BLACK FH110EBK	BLACK FH110EIBLK
CREAM FH110DFTCR	CREAM FH110ECRM	CREAM FH110EICRM
RRP €1,699.95	**RRP €1,699.95**	**RRP €1,899.95**

FREE 2 YEAR PARTS & LABOUR

AA ENERGY RATING

*Refers to the usable capacity of the oven

RANGE COOKERS

THE GAS COMPANY.IE
Call The Showroom : 01 9695000

900mm Cookcentre Range Cooker

- Dual Fuel Model Fitted with 5 Burners including 4kW Wok Burner
- Enamelled Cast Iron Pot Supports
- Separate Variable Electric Grill
- 58 Litre* Programmable Main Fan
- 86 Litre* Tall Fan Oven
- Internal Oven Lights
- Easy Clean Enamel Interiors
- Dual Fuel Models are Factory Fitted with Natural Gas Jets LPG (Bottle Gas) Jets are Supplied
- H:895mm W:900mm D:600mm

ALL ELECTRIC VERSIONS HAVE A CERAMIC HOB WITH 5 ZONES
INDUCTION VARIANT HAS 4 INDUCTION ZONES PLUS WARMING ZONE

DUAL FUEL	ELECTRIC	INDUCTION
STAINLESS STEEL 90DFTPROFSTA	STAINLESS STEEL 90EPROFSTA	STAINLESS STEEL 90EIPROFSTA
BLACK 90DFTBLK	BLACK 90EBLK	BLACK 90EIBLK
RRP €1,499.95	**RRP €1,499.95**	**RRP €1,699.95**

1000mm Cookcentre Range Cooker

- Dual Fuel Model Fitted with 7 Burners Including 4kW Wok Burner
- Enamelled Cast Iron Pot Supports
- Separate Variable Electric Grill
- 58* Litre Conventional oven
- 64* Litre Programmable Main Fan Oven
- Storage Compartment
- Internal Oven Lights
- Easy Clean Enamel
- Dual Fuel Models are Factory Fitted with Natural Gas Jets
- LPG (Bottle Gas) Jets are Supplied
- H:895mm W:1000mm D:600mm

ALL ELECTRIC VERSIONS HAVE A CERAMIC HOB WITH 6 ZONES
INDUCTION VARIANT HAS 5 INDUCTION ZONES

DUAL FUEL	ELECTRIC	INDUCTION
STAINLESS STEEL 100DFTPROFSTA	STAINLESS STEEL 100EPROFSTA	STAINLESS STEEL 100EIPROFSTA
BLACK 100DFTBLK	BLACK 100EBLK	BLACK 100EIBLK
RRP €1,599.95	**RRP €1,599.95**	**RRP €1,799.95**

1100mm Cookcentre Range Cooker

- Dual Fuel Model Fitted with 7 Burners Including 4kW Wok Burner
- Enamelled Cast Iron Pot Supports
- Separate Variable Electric Grill
- 58* Litre Conventional oven
- 64* Litre Programmable Main Fan Oven
- Storage Compartment
- Internal Oven Lights
- Easy Clean Enamel
- Dual Fuel Models are Factory Fitted with Natural Gas Jets
- LPG (Bottle Gas) Jets are Supplied
- H:895mm W:1100mm D:600mm

ALL ELECTRIC VERSIONS HAVE A CERAMIC HOB WITH 6 ZONES
INDUCTION VARIANT HAS 5 INDUCTION ZONES

DUAL FUEL	ELECTRIC	INDUCTION
STAINLESS STEEL 110DFTPROFSTA	STAINLESS STEEL 110EPROFSTA	STAINLESS STEEL 110EIPROFSTA
BLACK 110DFTBLK	BLACK 110EBLK	BLACK 110EIBLK
RRP €1,699.95	**RRP €1,699.95**	**RRP €1,899.95**

*Refers to the usable capacity of the oven

FREE-STANDING COOKERS

belling®

60cm Twin Cavity

RRP €469.95

- Variable grill 37 litres
- Main fan oven 67 litres
- 4 ceramic cooking zones
- Easy clean enamel
- Hot Hob Indicator
- H 895mm W 595mm D 600mm

☐ BLACK BFSE60TCBLK

FREE 2 YEAR PARTS & LABOUR

60cm Premium Double Oven

RRP €569.95

- Top oven & variable grill 37 litres
- Main fan oven 67 litres
- 4 ceramic cooking zones
- Catalytic Liners
- Hot hob Indicator
- Large Touch Screen Auto Timer
- H 895mm W 595mm D 600mm

☐ BLACK BFSE60DOPBK
☐ INOX BFSE60DOPIX

FREE 2 YEAR PARTS & LABOUR

FREE-STANDING COOKERS

THE GAS COMPANY.IE
Call The Showroom : 01 9695000

NW50ES

newworld

- 4 Solid Plates
- Large Main Oven with Grill
- Glass Doors
- Easy Clean Enamel Interior
- H:895mm W:500mm D:600mm

☐ WHITE NW50ESWH

■ BLACK NW50ESBLK

RRP €229.95

FS50ET

belling

- 2 Rapid & 2 Standard Solid Plates
- Large Main Oven
- Separate Grill
- Glass Doors
- Easy Clean Enamel Interior
- H:895mm W:500mm D:600mm

☐ WHITE FS50ETWH

RRP €319.95

FS50EFDO

belling

- 2 Rapid & 2 Standard Solid Plates
- Main Fan Oven
- Top Oven with Grill
- Glass Doors
- Easy Clean Enamel Interior
- H:895mm W:500mm D:600mm

☐ WHITE FS50EFDOWH

■ BLACK FS50EFDOBLK

▨ SILVER FS50EFDOSIL

RRP €369.95

FS50EDOFC

belling

- 4 Zone Ceramic Hob
- Main Fan Oven
- Top Oven with Grill
- Glass Doors
- Easy Clean Enamel Interior
- H:895mm W:500mm D:600mm

☐ WHITE FS50EDOFCWH

■ BLACK FS50EDOFCBLK

RRP €469.95

FSG50TC

belling

- Gas Oven with Separate Gas Grill
- 4 Gas Cooking Zones
- Catalytic Liners in Main Oven
- Oven Light
- Available for Natural Gas and Bottled Gas
- H:895mm W:500mm D:600mm

☐ WHITE FSG50TCWH LPG

■ BLACK FSG50TCBLKNG
FSG50TCBLK LPG

RRP €419.95

FSG60TC

belling

- Gas Oven with Separate Gas Grill
- 4 Gas Cooking Zones
- Catalytic Liners in Main Oven
- Oven Light
- Available for Natural Gas and Bottled Gas
- H:895mm W:600mm D:600mm

■ BLACK FSG60TCBLKNG
FSG60TCBLK LPG

RRP €449.95

BUILT-IN COOKING

THE GAS COMPANY.IE
Call The Showroom : 01 9695000

Dimplex DX606FSTA

Built-in Single Fan Oven

- 70 Litre Fan Oven with Variable Grill
- 6 Functions
- Enamel Interior
- Removable Inner Door Glass

STAINLESS STEEL DX606FSTA

RRP €219.95

belling BI65FSTA

Built-in Single Fan Oven

- 72 Litre Fan Oven with Variable Grill
- 5 Functions
- Catalytic Liners
- 'Easy Clip' Inner Door Glass Removal
- Mechanical Minute Minder
- 96mm Slimline Control Panel

STAINLESS STEEL BI65FSTA

RRP €269.95

belling BI65FBLK

Built-in Single Fan Oven

- 72 Litre Fan Oven with Variable Grill
- 5 Functions
- Catalytic Liners
- 'Easy Clip' Inner Door Glass Removal
- Mechanical Minute Minder
- 96mm Slimline Control Panel

BLACK BI65FBLK

RRP €269.95

belling BI69MFSTA

Built-in Single Multifunction Oven

- 72 Litre Multifunction Fan Oven with Variable Grill
- 9 Functions
- Catalytic Liners
- Triple Glazed Door
- 'Easy Clip' Inner Door Glass Removal
- Large Touch Screen Auto Timer
- Push/Pull Controls
- 96mm Slimline Control Panel

STAINLESS STEEL BI69MFSTA

RRP €319.95

belling BI69MFBLK

Built-in Single Multifunction Oven

- 72 Litre Multifunction Fan Oven with Variable Grill
- 9 Functions
- Catalytic Liners
- Triple Glazed Door
- 'Easy Clip' Inner Door Glass Removal
- Large Touch Screen Auto Timer
- Push/Pull Controls
- 96mm Slimline Control Panel

BLACK BI69MFBLK

RRP €319.95

belling BI613MFSTA

Built-in Premium Single Multifunction Oven

- 72 Litre Premium Multifunction Fan Oven with Variable Grill
- 13 Functions
- Electronic Control
- Catalytic Liners
- Triple Glazed Door
- Soft Close Door
- 'Easy Clip' Inner Door Glass Removal
- Large Touch Screen Auto Timer
- Fully Extendable Telescopic Shelf
- 96mm Slimline Control Panel

STAINLESS STEEL BI613MFSTA

RRP €399.95

belling BI613MFBLK

Built-in Premium Single Multifunction Oven

- 72 Litre Premium Multifunction Fan Oven with Variable Grill
- 13 Functions
- Electronic Control
- Catalytic Liners
- Triple Glazed Door
- Soft Close Door
- 'Easy Clip' Inner Door Glass Removal
- Large Touch Screen Auto Timer
- Fully Extendable Telescopic Shelf
- 96mm Slimline Control Panel

BLACK BI613MFBLK

RRP €399.95

BUILT-IN COOKING

THE GAS COMPANY.IE
Call The Showroom : 01 9695000

BI903FP

Built-in Double Oven

- Top Oven with Variable Grill 38 Litres
- Main Oven Fan 72 Litres
- 3 Function
- Catalytic Liners To Main Oven
- 'Easy Clip' Inner Door Glass Removal
- Large Touch Screen Auto Timer
- 96mm Slimline Control Panel

BLACK BI903FPBLK

RRP €519.95

BI909MF

Built in Premium Double Oven Multifunction

- Top Oven with Variable Grill 38 Litres
- Main Oven Multifunction Fan 72 Litres
- 9 Function
- Catalytic Liners to Main Oven
- 'Easy Clip' Inner Door Glass Removal
- Triple Glazed Door to Main Oven
- Soft Close Door to Main Oven
- Large Touch Screen Auto Timer
- 96mm Slimline Control Panel

STAINLESS STEEL BI909MFSTA
BLACK BI909MFBLK

RRP €599.95

BI703FP

Built Under Double Oven

- Top Oven with Variable Grill 38 Litres
- Main Fan Oven 54 Litres
- 3 Functions
- Catalytic Liners to Main Oven
- Large Touch Screen Auto Timer
- 'Easy Clip' Inner Door Glass
- 96mm Slimline Control Panel

BLACK BI703FPBLK

RRP €629.95

BI703FP

Built Under Double Oven

- Top Oven with Variable Grill 38 Litres
- Main Fan Oven 54 Litres
- 3 Functions
- Catalytic Liners to Main Oven
- Large Touch Screen Auto Timer
- 'Easy Clip' Inner Door Glass
- 96mm Slimline Control Panel

STAINLESS STEEL BI703FPSTA

RRP €629.95

BFM25IX

Freestanding Microwave & Grill Stainless Steel

- 25 Litre Capacity
- 900 Watt Power
- 1000 Watt Grill
- Stainless Steel Interior
- No Turntable Required
- Ideal For Large Plates
- Digital Control

RRP €149.95

BIM60STA

Built-in Microwave Stainless Steel

- 23 Litre Capacity
- 900 Watt
- 5 Power Levels
- Auto Weight Cook & Defrost
- Multi Stage Cooking
- Child Lock
- H: 390mm W: 595mm D: 365mm

RRP €229.95

BIM60BLK

Built-in Microwave Black

- 23 Litre Capacity
- 900 Watt
- 5 Power Levels
- Auto Weight Cook & Defrost
- Multi Stage Cooking
- Child Lock
- Available in Stainless Steel

RRP €229.95

BUILT-IN COOKING

THE GAS COMPANY.IE
Call The Showroom : 01 9695000

DXCH60T

600mm Touch Control Ceramic Hob

- 4 Touch Ceramic Zones
- Timer
- Child Lock
- Hot Hob Indicator
- Black Glass

BLACK DXCH60T **RRP €219.95**

BCH60RB

600mm Manual Control Ceramic Hob

- 4 Rotary Ceramic Zones
- Premium Bevelled Edge Design
- Side Positioned Controls
- Hot Hob Indicator
- Piano Black Glass

BLACK BCH60RB **RRP €239.95**

BCH60T

600mm Touch Control Ceramic Hob

- 4 Touch Ceramic Zones
- Timer
- Child Lock
- Hot Hob Indicator
- Piano Black Glass

BLACK BCH60T **RRP €259.95**

BIH60T

600mm Touch Control Induction Hob

- 4 Induction Ceramic Zones
- Timer
- Child Lock
- Power Boost
- Auto Shutdown
- Piano Black Glass

BLACK BIH60T **RRP €289.95**

BCH77TB

770mm Touch Control Ceramic Hob

- 5 Touch Ceramic Zones
- Premium Bevelled Edge Design
- Slider Style Controls
- 1 - Dual Zone
- Timer
- Child Lock
- Hot Hob Indicator
- Piano Black Glass

BLACK BCH77TB **RRP €399.95**

BIH90TB

900mm Touch Control Induction Hob

- 5 Induction Ceramic Zones
- Premium Bevelled Edge Design
- Slider Style Controls
- 4 Linkable Zones
- Timer
- Child Lock
- Auto Shutdown
- Power Boost
- Piano Black Glass

BLACK BIH90TB **RRP €599.95**

BGH602

600mm 4 Ring Gas Hob

- 4 Gas Burners Including 1 Large, 2 Medium, 1 Simmer
- Ribbon Iron Pan Supports
- Auto Ignition
- Front Controls
- Flame Failure Device
- Available in Both Natural Gas and LPG

STAINLESS STEEL
BGH602CSTA NG
BGH602CSTA LPG

RRP €199.95

BGH75

750mm 5 Ring Gas Hob

- 5 Gas Burners Including 1 Wok 1 Large, 2 Medium, 1 Simmer
- Ribbon Iron Pan Supports
- Auto Ignition
- Front Controls
- Flame Failure Device
- Available in Both Natural Gas and LPG

STAINLESS STEEL
BGH75CSTA NG
BGH75CSTA LPG

RRP €299.95

HOODS

THE GAS COMPANY.IE
Call The Showroom : 01 9695000

CHIM600R

- 600mm wide
- 3 Speed Motor
- 2 LED Lights
- Metal Filters
- Max Noise Level 65db
- Extraction Rate 320m3/h

FREE 2 YEAR PARTS & LABOUR

BLACK CHIM600RBK
STAINLESS STEEL CHIM600RSS

RRP €129.95

CHIM604G

- 600mm wide
- 4 speed motor with boost function
- 2 LED lights
- Metal filters
- Max. noise level 65db
- Extraction rate 800m3/h
- Ducting hose included
- A energy rating

FREE 2 YEAR PARTS & LABOUR

BLACK CHIM604GBLK
STAINLESS STEEL CHIM604GSTA

RRP €219.95

CHIM904G

- 900mm wide
- 4 speed motor with boost function
- 2 LED lights
- Metal filters
- Max. noise level 65db
- Extraction rate 800m3/h
- A energy rating

FREE 2 YEAR PARTS & LABOUR

BLACK CHIM904GBLK
STAINLESS STEEL CHIM904GSTA

RRP €269.95

90CHIM

- 900mm wide
- 3 Speed Motor
- 2 LED Lights
- 3 Metal Filters
- Max Noise Level 60db
- Extraction Rate 512m3/h

FREE 2 YEAR PARTS & LABOUR

BLACK 90CHIMBK
CREAM 90CHIMCRM
STAINLESS STEEL 90CHIMSTA

RRP €249.95

100CHIM

- 1000mm wide
- 3 Speed Motor
- 2 Lights
- 3 Metal Filters
- Max Noise Level 60db
- Extraction Rate 512m3/h

FREE 2 YEAR PARTS & LABOUR

BLACK 100CHIMBK
CREAM 100CHIMCRM
STAINLESS STEEL 100CHIMSTA

RRP €299.95

110CHIM

- 1100mm wide
- 3 Speed Motor
- 2 Lights
- 3 Metal Filters
- Max Noise Level 60db
- Extraction Rate 512m3/h

FREE 2 YEAR PARTS & LABOUR

BLACK 110CHIMBK
CREAM 110CHIMCRM
STAINLESS STEEL 110CHIMSTA

RRP €349.95

INTEGRATED APPLIANCES

THE GAS COMPANY.IE
Call The Showroom : 01 9695000

belling®

BIDW1462
Fully Integrated Dishwasher

EXTRA LARGE, 14 PLACE SETTING

QUIET OPERATION

SLIDING CUTLERY TRAY

EASY-LIFT ADJUSTABLE BASKET

TALL GLASS HOLDER

SLIDING CUTLERY BASKET

FLAT AND FOLD BOTTOM RACK - IDEAL FOR POTS AND PANS

HALF LOAD OPTION

DELAY START

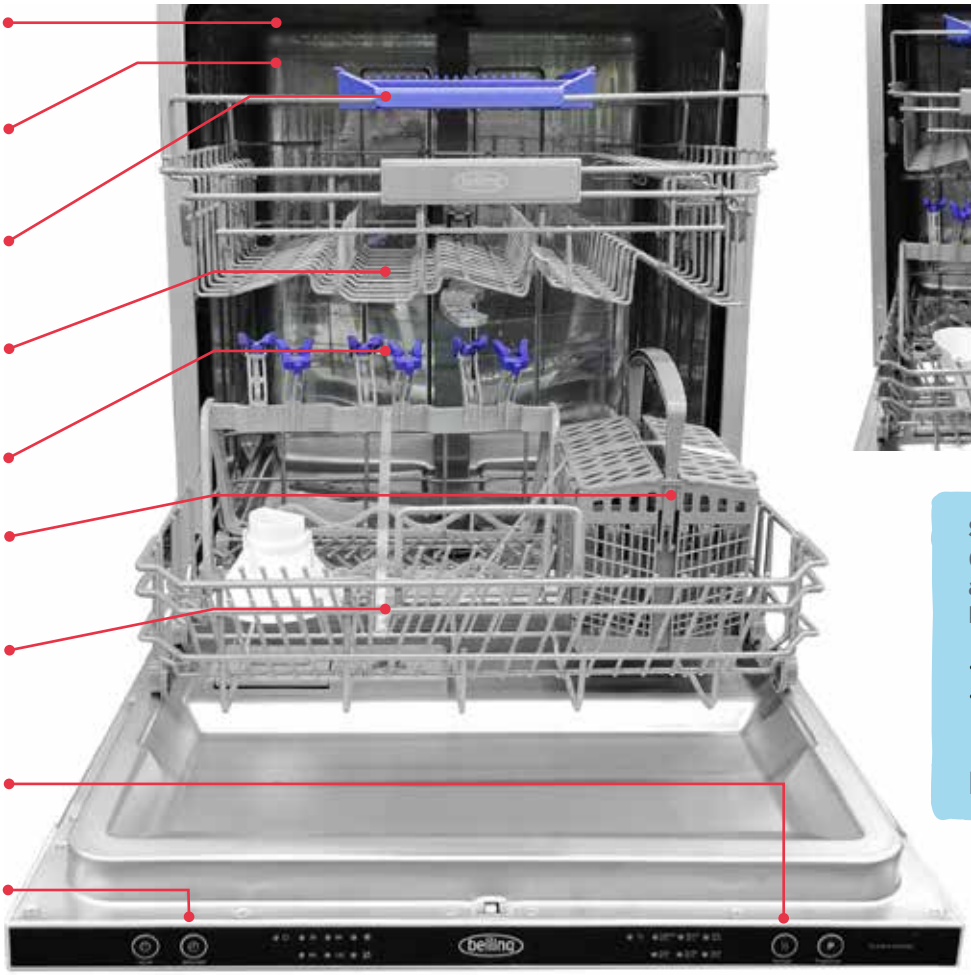

Slimline version (45cm wide) also available BIDW1062

- 10 Place Settings
- 2520 Litre Water Usage Annually

RRP €349.95

- 14 Place Settings
- 49 dB
- 6 Programs Including:
  - » 40 Minute Rapid Wash
  - » 90 Minute Wash @ 65°
  - » Glass Wash
  - » Economy Wash
  - » Normal Wash
  - » Intensive Wash
- Half Load Option
- Delay Start Option
- 3360 Litre Water Usage Annually

RRP €379.95

FREE 2 YEAR PARTS & LABOUR

A+ ENERGY RATING

INTEGRATED APPLIANCES

THE GAS COMPANY.IE
Call The Showroom : 01 9695000

BIFF7129L

Integrated Fridge Freezer

- 1770mm High
- 70/30 Spilt
- Low Frost
- Silver Trim to Shelves and Door
- Led Interior Light
- Reversible Doors
- 2 Clear Freezer Drawers
- Fridge Capacity 192 Litres
- Freezer Capacity 77 Litres

LOW FROST

FREE 2 YEAR PARTS & LABOUR

A+ ENERGY RATING

RRP €429.95

BIFF5050E

Integrated Fridge Freezer

- 1770mm High
- 50/50 Split Frost Free
- Electronic Control
- LED Roof Light
- Chrome Trim Shelves and Doors
- Wine Rack
- Glass Shelves
- 4 Clear Freezer Drawers
- Reversible Doors
- Fridge Capacity 147 Litre
- Freezer Capacity 86 Litre

FROST FREE

FREE 2 YEAR PARTS & LABOUR

A+ ENERGY RATING

RRP €479.95

BIFF7030E

Integrated Fridge Freezer

- 1770mm High
- 70/30 Split Frost Free Electronic Control
- LED Side Lights
- Chrome Trim Shelves and Doors
- Wine Rack
- Glass Shelves
- 3 Clear Freezer Drawers
- Reversible Doors
- Fridge Capacity 180 Litre
- Freezer Capacity 63 Litre

FROST FREE

FREE 2 YEAR PARTS & LABOUR

A+ ENERGY RATING

RRP €479.95

BIL305

Integrated Larder Fridge 177CM

FROST FREE

FREE 2 YEAR PARTS & LABOUR

A+ ENERGY RATING

RRP €599.95

DEFROSTING EXPLAINED

FROST FREE — No ice build-up. No defrosting required.

LOW FROST — Reduced ice build-up. Less frequent defrosting required.

STATIC — Ice will build up. Regular defrosting required.

FREE-STANDING REFRIGERATION

THE GAS COMPANY.IE
Call The Showroom : 01 9695000

BL45WH

472mm Table Top Fridge

- Fridge Capacity 45 Litre
- Integrated Handle
- Reversible Door
- Wire Shelf
- H:492mm W:472mm D:450mm

☐ WHITE BL45WH

RRP €139.95

FREE 2 YEAR PARTS & LABOUR | A+ ENERGY RATING

BFZ32WH

472mm Table Top 4* Freezer

- Freezer Capacity 32 Litre
- Integrated Handle
- Reversible Door
- H:492mm W:472mm D:450mm

☐ WHITE BFZ32WH

RRP €159.95

FREE 2 YEAR PARTS & LABOUR | A+ ENERGY RATING

BWC34BLK

Wine Cooler

- 34 Bottle Capacity
- Chrome Shelving
- Led Touch Display
- Temperature +5- +18 Degrees
- Interior Led Lighting
- Black Glass With SS Trim
- H:842mm W:490mm D:440mm

RRP €299.95

FREE 2 YEAR PARTS & LABOUR

BR98

500mm Under-counter Fridge

- Fridge Capacity 84 Litre Freezer Capacity 14 Litre
- 2 Glass Shelves
- Reversible Doors
- H:850mm W:500mm D:515mm

☐ WHITE BR98WH

RRP €199.95

FREE 2 YEAR PARTS & LABOUR | A+ ENERGY RATING | ★★★★ STAR RATING

BL112

500mm Under-counter Larder Fridge

- Fridge Capacity 112 Litre
- Match for BFZ68
- 3 Glass Shelves
- Reversible Doors
- H:850mm W:500mm D:515mm

☐ WHITE BL112WH

RRP €199.95

FREE 2 YEAR PARTS & LABOUR | A+ ENERGY RATING

BFZ68

500mm Under-counter Freezer

- Freezer Capacity 68 Litre
- Match for BL112
- 3 Drawers
- Reversible Doors
- H:850mm W:500mm D:515mm

☐ WHITE BFZ68WH

RRP €219.95

FREE 2 YEAR PARTS & LABOUR | A+ ENERGY RATING

BR113

540mm Under-counter Fridge

- Fridge Capacity 97 Litre Freezer Capacity 16 Litre
- 3 Glass Shelves
- Reversible Doors with Handle
- H:850mm W:545mm D:565mm

☐ WHITE BR113WH

RRP €219.95

FREE 2 YEAR PARTS & LABOUR | A+ ENERGY RATING | ★★★★ STAR RATING

BL134

540mm Under-counter Larder Fridge

- Fridge Capacity 134 Litre
- 4 Glass Shelves
- Reversible Doors with Handle
- Match for BFZ87
- H:850mm W:545mm D:565mm

☐ WHITE BL134WH

RRP €219.95

FREE 2 YEAR PARTS & LABOUR | A+ ENERGY RATING

BFZ87

540mm Under-counter Freezer

- Freezer Capacity 87 Litre
- 3 Drawers
- Reversible Doors with Handle
- Match for BL134
- H:850mm W:545mm D:565mm

☐ WHITE BFZ87WH

RRP €249.95

FREE 2 YEAR PARTS & LABOUR | A+ ENERGY RATING

FREE-STANDING REFRIGERATION

THE GAS COMPANY.IE
Call The Showroom : 01 9695000

FRIDGE FREEZERS

BFF207

540mm Top Mount Fridge Freezer

- 1430mm High
- Fridge Capacity 166 Litre
- Freezer Capacity 41 Litre
- Glass Shelves
- Reversible Doors
- H:1430mm W:540mm D:550mm

☐ WHITE BFF207WH
■ BLACK BFF207BLK

FREE 2 YEAR PARTS & LABOUR
A+ ENERGY RATING

RRP €299.95

BFF205

550mm Fridge Freezer

- 1500mm High
- Fridge capacity 139 litre
- Freezer capacity 64 litre
- Glass Shelves with Satin Trim
- Reversible Doors, Recessed Handle
- H:1500mm W:550mm D:545mm

☐ WHITE BFF205WH
▨ INOX BFF205IX

FREE 2 YEAR PARTS & LABOUR
A+ ENERGY RATING

RRP €339.95

BFF229

550mm Fridge Freezer

- 1630mm High
- Fridge Capacity 141 Litres
- Freezer Capacity 88 Litres
- Silver Trim to Glass Shelves
- 4 Freezer Drawers
- Recessed Door Handles
- H:1630mm W:550mm D:550mm

☐ WHITE BFF229WH
▨ INOX BFF229IX

FREE 2 YEAR PARTS & LABOUR
A+ ENERGY RATING

RRP €349.95

BFF260

550mm Fridge Freezer

- 1800mm High
- Fridge Capacity 189 Litre
- Freezer Capacity 71 Litre
- Glass Shelves
- Reversible Doors with Recessed Handles
- H:1800mm W:545mm D:550mm

▨ STAINLESS STEEL BFF260SS

FREE 2 YEAR PARTS & LABOUR
A+ ENERGY RATING

RRP €359.95

THE GAS COMPANY.IE
Call The Showroom : 01 9695000

FREE-STANDING REFRIGERATION

FROST FREE FRIDGE FREEZERS

BFF200

550mm Frost Free Fridge Freezer

FROST FREE

FREE 2 YEAR PARTS & LABOUR

A+ ENERGY RATING

- 1630mm high
- 203L Net Capacity, Frost Free
- Fridge Capacity 137 Litre
- Freezer Capacity 66 Litre
- Silver Detailing to Glass Shelves
- Recessed Door Handles
- H1630mm W:550mm D:550mm

☐ WHITE BFF200WH

■ INOX BFF200IX

RRP €389.95

BFF270

550mm Frost Free Fridge Freezer

FROST FREE

FREE 2 YEAR PARTS & LABOUR

A+ ENERGY RATING

- 1800mm High
- Fridge Capacity 206 Litre
- Freezer Capacity 64 Litre
- Glass Shelves
- Reversible Doors with Recessed Handles
- H:1800mm W:545mm D:550mm

■ STAINLESS STEEL BFF270SS

RRP €419.95

BFF285

600mm Frost Free Fridge Freezer

FROST FREE

FREE 2 YEAR PARTS & LABOUR

A+ ENERGY RATING

- 1850mm High
- Fridge Capacity 210 Litres
- Freezer Capacity 75 Litres
- Electronic Control Panel
- Silver Trim to Glass Shelves
- H:1850mm W:600mm D:600mm

■ INOX BFF285IX

RRP €469.95

BFF416

700mm Frost Free Fridge Freezer

FROST FREE

FREE 2 YEAR PARTS & LABOUR

A+ ENERGY RATING

- 1880mm High
- Fridge Capacity 316 Litres
- Freezer Capacity 100 Litres
- Electronic Control Panel
- Silver Trim to Glass Shelves
- Large Chiller Zone on Telescopic Rail
- H:1880mm W:600mm D:666

■ STAINLESS STEEL BFF416SS

RRP €699.95

BL355

600mm Frost Free Larder Fridge

FROST FREE

FREE 2 YEAR PARTS & LABOUR

A+ ENERGY RATING

- 1850mm High
- Fridge Capacity 355 Litres
- Electronic Control Panel
- Silver Trim to Glass Shelves
- Premium Storage Design
- Easy Open Door Handle
- H:1850mm W:600mm D:600mm

■ INOX BL355IX

RRP €599.95

BFZ269

600mm Frost Free Larder Freezer

FROST FREE

FREE 2 YEAR PARTS & LABOUR

A+ ENERGY RATING

- 1850mm High
- Freezer Capacity 272 Litres
- Electronic Control Panel
- Silver Trim to Glass Shelves
- Premium Storage Design
- Easy Open Door Handle
- Left Side Hinge Opening
- H:1850mm W:600mm D:600mm

■ INOX BFZ269IX

RRP €699.95

AMERICAN STYLE

THE GAS COMPANY.IE
Call The Showroom : 01 9695000

BAFF526SS

RRP €899.95

- 526 Litre Net Capacity
- 344 Litre Fridge, 183 Litre Freezer
- Fully Frost Free
- Multi Air Flow
- Super Freezing
- Super Cooling
- Child Lock, Door Open Alarm
- High Temperature Alarm
- Twist Ice Maker
- 10KG/24 Hrs Freezing Capacity
- 47dB Max Noise Level
- 7 Hour Power Failure Storage Time
- 445kW/Annum Energy Consumption
- Stainless Steel Handles
- W 895mm H 1788mm D 745mm

FROST FREE ✓ | FREE 2 YEAR PARTS & LABOUR | A+ ENERGY RATING

BAFF493SS

RRP €999.95

- 493 Litre Nett Capacity
- 338 Litre Fridge, 155 Litre Freezer
- Automatic Ice & Water
- Frost Free
- Multi-Air Flow
- Electronic Control Panel
- Child Lock
- Door Open Alarm
- Super Freezing
- Super Cooling
- Led Interior Light
- 4.5 Litre Water Tank
- 10kg/24 Hrs Freezing Capacity
- 7 Hour Power Failure Storage Time
- Stainless Steel Handles
- W 895mm H 1788mm D 745mm

ICE & WATER | NO PLUMBING | NO FILTER | EASY INSTALL

FROST FREE ✓ | FREE 2 YEAR PARTS & LABOUR | A+ ENERGY RATING

MULTI DOOR

THE GAS COMPANY.IE
Call The Showroom : 01 9695000

BMD400IX

RRP €899.95

- 400L Net Capacity
- 269 Fridge, 131L Freezer
- Multi Door Fridge Freezer
- Electronic Temperature Control
- Silver Detailing To Glass Shelves
- 16Kg Fresh Food Freezing Capacity For 24Hrs
- W 790mm H 1800mm D 700mm

FROST FREE ✓ | FREE 2 YEAR PARTS & LABOUR | A+ ENERGY RATING

BAFF517BKGLS

RRP €999.95

- 517L Net Capacity
- 345L Fridge
- 172L Freezer
- Black Glass
- Aluminium Handles
- Frost Free
- Led Interior Lighting
- 10Kg/24 Freezing Capacity
- 408Kw/Anum Energy Consumption
- Electronic Control Panel
- Multi Air Flow
- 8 Hour Power Failure Storage
- W 900mm H 1770mm D 745mm

FROST FREE ✓ | FREE 2 YEAR PARTS & LABOUR | A+ ENERGY RATING

FREE-STANDING REFRIGERATION

CHEST FREEZERS

THE GAS COMPANY.IE
Call The Showroom : 01 9695000

belling®

BECF100

545mm / 100L

FROST SHIELD
A ENERGY RATING
FREE 2 YEAR PARTS & LABOUR

RRP €219.95

belling®

BECF145

705mm / 145L

FROST SHIELD
A ENERGY RATING
FREE 2 YEAR PARTS & LABOUR

RRP €249.95

belling®

BECF200

905mm / 200L

FROST SHIELD
A ENERGY RATING
FREE 2 YEAR PARTS & LABOUR

RRP €319.95

belling®

BECF260

960mm / 260L

FROST SHIELD
A ENERGY RATING
FREE 2 YEAR PARTS & LABOUR

RRP€399.95

belling®

BECF316

1120mm / 316L

FROST SHIELD
A ENERGY RATING
FREE 2 YEAR PARTS & LABOUR

RRP €419.95

belling®

BECF380

1300mm / 380L

FROST SHIELD
A ENERGY RATING
FREE 2 YEAR PARTS & LABOUR

RRP €519.95

Model Number	BECF100	BECF145	BECF200	BECF260	BECF316	BECF380
Total gross capacity in litres	100	145	200	260	316	380
Freezing capacity KG per 24 hours	10	13.5	15.5	21	23	28
Max. Hours storage time at breakdown	24	26	30	36	37	40
Energy consumption class	A+	A+	A+	A+	A+	A+
Lock with handle	✓	✓	✓	✓	✓	✓
Number of baskets	1	1	1	2	2	2
Defrost drain to front	✓	✓	✓	✓	✓	✓
Interior light	✓	✓	✓	✓	✓	✓
Temperature warning indicator (red)	✓	✓	✓	✓	✓	✓
Fast freeze fresh food	✓	✓	✓	✓	✓	✓
Unit dimensions MM (H/W/D)	845*545*545	845*705*545	845*905*545	845*960*700	845*1120*700	845*1300*700

Frost shield

Ensures your freezer will function properly even in temperatures as low as -15°C. Suitable for storage in sheds, garages and utilities.

Waterproof LED control panel

Our patented control panel is waterproof and backlit, ideal if your freezer is positioned in a dark and damp location.

Interior LED lighting

Greater visibility with the eco and long-lasting LED lighting.

Frontal water defrost drain

Front-positioned water drain is easily accessible to allow for manual defrost.

Safety lock

Lock and key to ensure safeguard from children and also to keep food safe-stored, ideal for keeping in garages, sheds and utilities.

Premium storage basket

Heavy duty sliding basket giving you extra flexibility for organising smaller food packages.

Super freezing

Rapidly cool to low temperature, perfect for fresh foods, with auto switch off after 52 hours.

Strong and balanced hinge

The counterbalanced hinge means the door can stay still from 45° to 90°, so you can be hands-free when putting in or removing food.

Flame retardant

Manufactured with a flame retardant back providing increased protection, exceeding European safety standards.

LAUNDRY

WASHING MACHINES & TUMBLE DRYERS

Simplicity COLLECTION

BFW612

Belling Simplicity Washing Machine

- Quick Wash (15 Minutes)
- No Spin Option
- 23 Programmes
- Pre Wash and Extra Rinse Options
- 5 Temperatures
- Delay start

DIMENSIONS
H:84cm W:59.9cm D:55cm

RRP €269

Sensicare COLLECTION

BFW814

Belling Sensicare Washing Machine

- Sensiwash
- Hydrocare Drum
- Pluswash
- Timesaver
- Stain+

DIMENSIONS
H:85cm W:59.5cm D:56.5cm

RRP €399

WASHING MACHINE FEATURES

Hydrocare Drum
2000 holes located deep inside the drum carefully protect your wash from the risk of damage.

Easyload
Easy-load porthole door for greater access.

Sensiwash
Our integrated sensor weighs the load automatically and adjusts the level of water and energy required.

Pluswash
Allows you to pause the wash mid-cycle and add extra items to the load.

Timesaver
Gets through a wash 33% more quickly – cutting a jeans wash down from 108 minutes to 72.

Mywash
Memory feature to save your favourite wash cycle.

Sensitouch
Multifunction display giving you quick and easy access to your washing machine's settings and controls.

Stain+
Varies the intensity of the cycle depending on how dirty the clothes are.

Silentdrive
Multifunction display giving you quick and easy access to your washing machine's settings and controls.

Dry+
Choose from three different levels of drying power; extra dry, normal and gentle dry.

Simplicity COLLECTION

BFD700

Belling Simplicity Vented Dryer

- 3 Dry Levels
- Child Lock
- 130 Minute Standard Cycle
- 1 Hour 1KG Speed Dry
- Electronic Control
- Vent Hose Included

DIMENSIONS
H:84cm W:59.5cm D:55cm

RRP €219

Sensicare COLLECTION

BFCD800

Belling Sensicare Condenser Dryer

- Anticrease
- Delaystart
- Dry+
- Sensor Dry
- Filter Clean Indicator
- Tank Empty Indicator

DIMENSIONS
H:84.5cm W:59.9cm D:61.5cm

RRP €349

TUMBLE DRYER FEATURES

Dry+
Choose from three different levels of drying power; extra dry, normal and gentle dry.

Delaystart
Allows you to delay the start of the cycle by up to 24 hours, enabling you to arrive home just in time for when the cycle finishes.

Anticrease
Prevents creases forming by loosening clothes at regular intervals.

DISHWASHERS

Simplicity
COLLECTION

BFDW6142WH
Belling Simplicity Dishwasher

FEATURES

Flexible
3 storage levels including cutlery tray, all easily adjustable to cater for larger items

Noisefriendly
49db for a quiet life

Rapidwash
40 minute wash - the perfect programme for when you're in a hurry

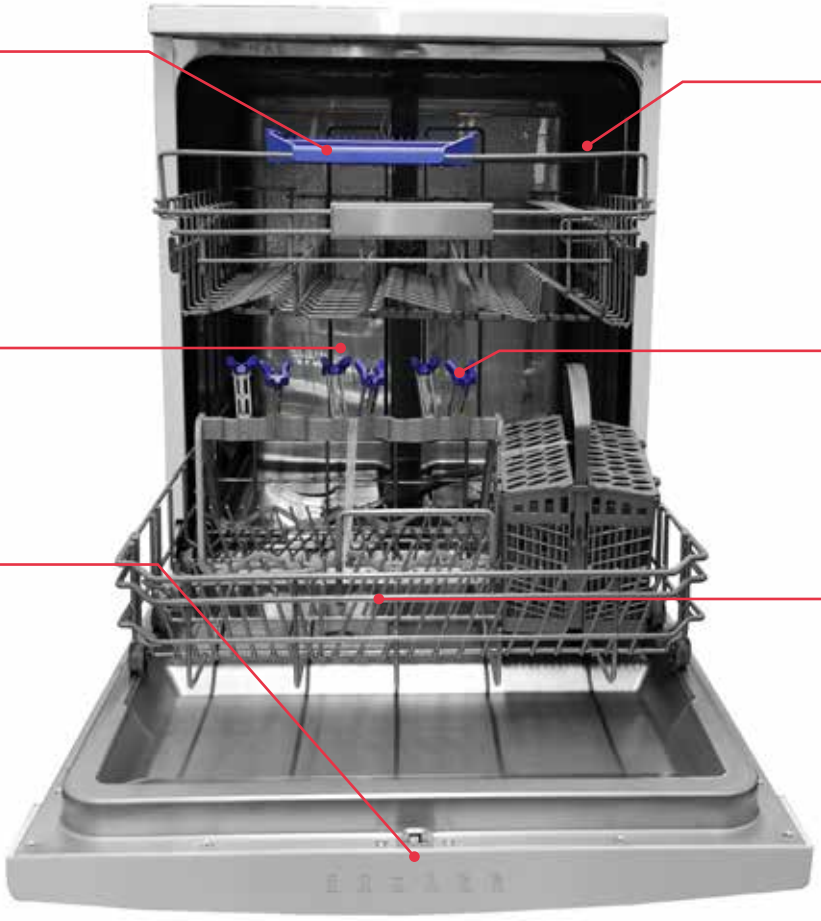

Largecapacity
Space for 14 place settings, from soup plates to dessert spoons

Tall glass holder

Watersaving
Consumes only 3000 litres of water annually

FREE 2 YEAR PARTS & LABOUR

DIMENSIONS
H:84.5cm W:54.8cm D:60cm

RRP €319

- 14 Place Setting
- Three Baskets including Cutlery Tray
- 3080L Of Water Annually
- A++ Energy
- 49Db
- 4 Temperature Options: 40°C, 50°C, 55°C, 65°C
- 6 Programme Options, Including 40 Min Rapid Wash And 90 Min Wash, Glass Wash, Economy Wash, Normal Wash, Intensive Wash
- Half Load Option
- Two Year Warranty
- White Only

DIMENSIONS

CHIM600R

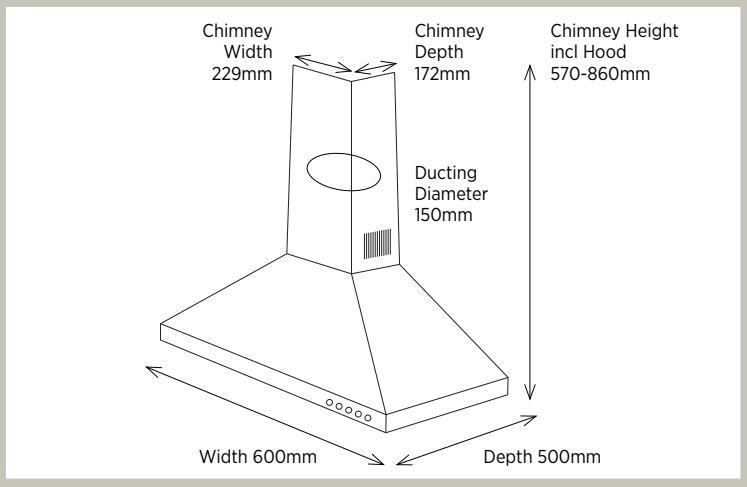

CHIM604G

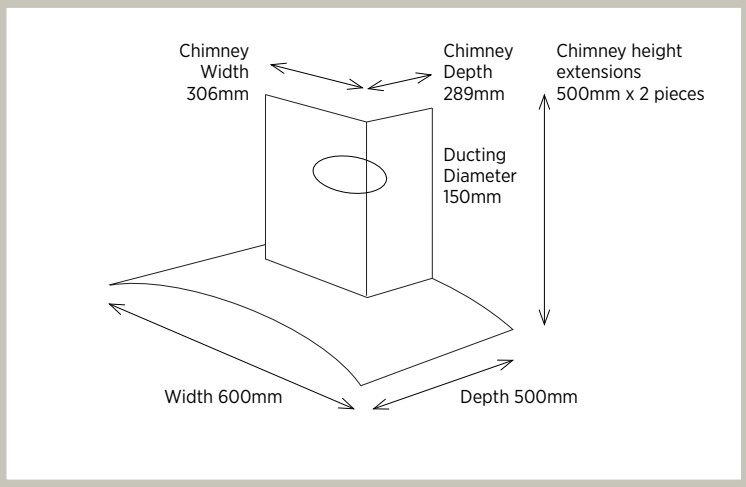

90CHIM

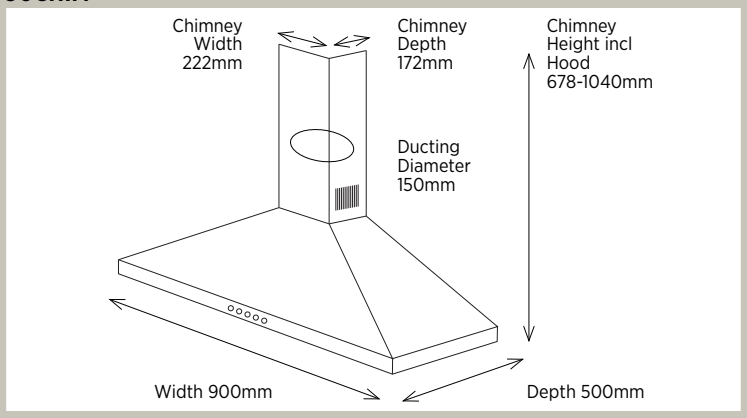

CHIM904G

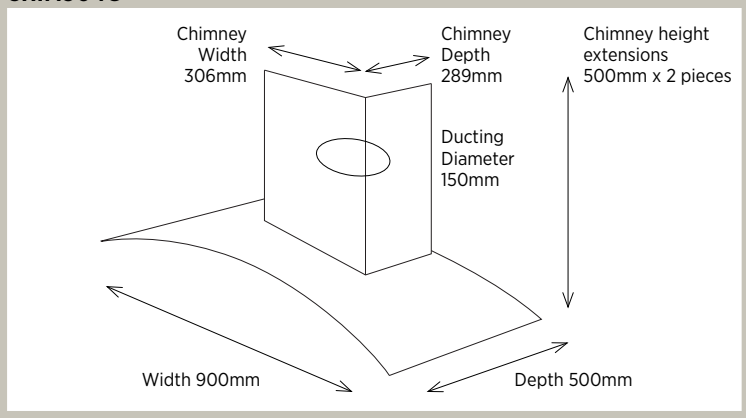

100CHIM

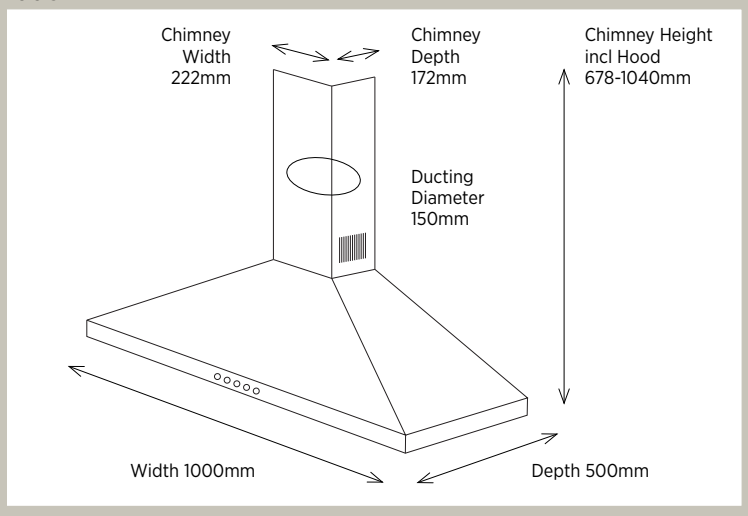

110CHIM

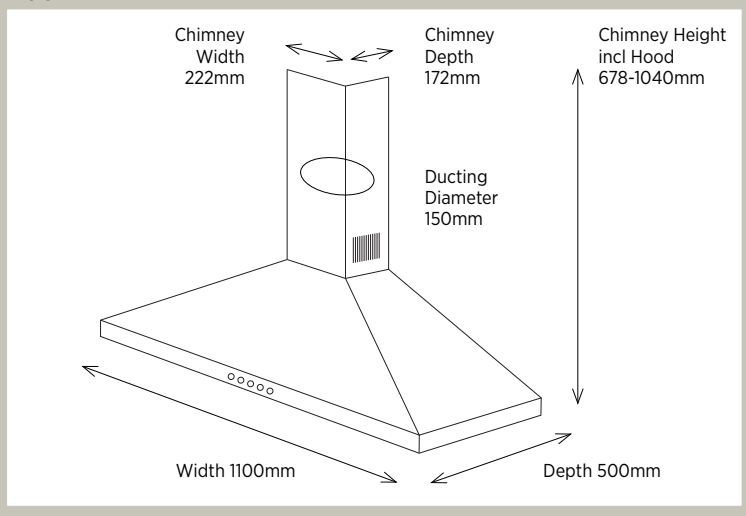

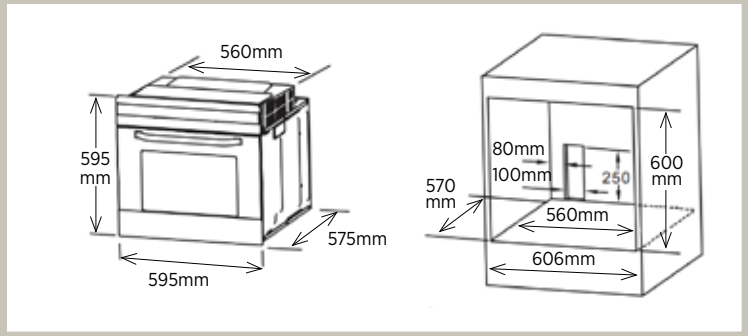

BUILT-IN SINGLE OVEN

DX606FSTA

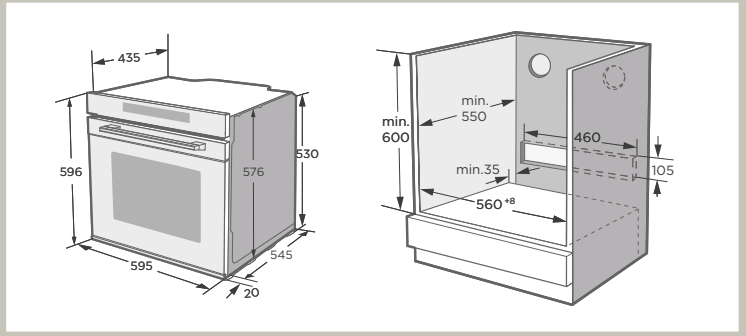

BUILT-IN SINGLE OVEN

BI65/BI69/BI613

ALL DIMENSIONS ARE APPROXIMATE AND SUBJECT TO CHANGE WITHOUT NOTICE. ALWAYS REFER TO USER/INSTALLATION MANUAL SUPPLIED.

DIMENSIONS

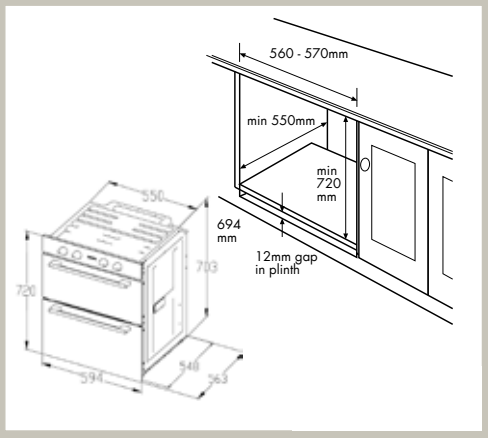

BUILT-UNDER DOUBLE OVENS
BI703FPBLK/BI703FPSTA

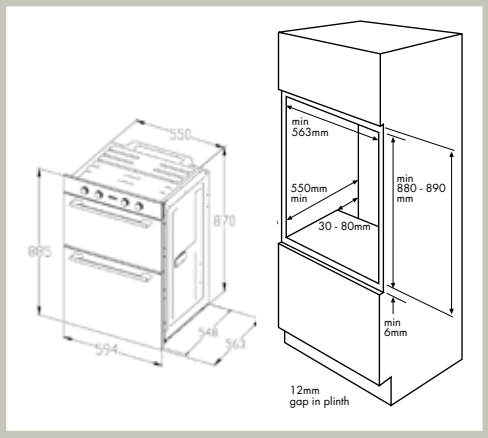

BUILT-IN DOUBLE OVENS
BI903FPBLK/BI909MFBLK/BI909MFSTA

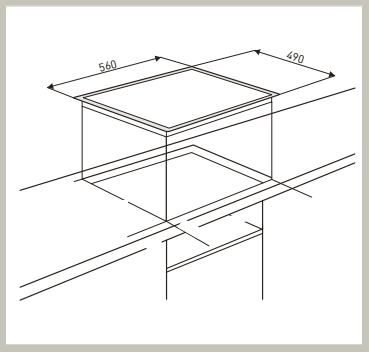

60CM BUILT-IN ELECTRIC HOBS
DXCH60T/BCH60RB/BCH60T/BIH60T

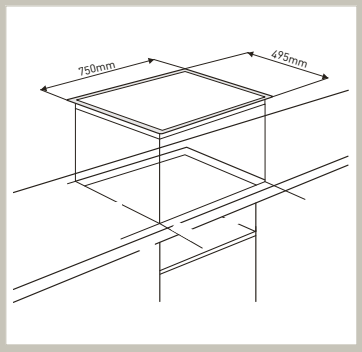

77CM BUILT-IN ELECTRIC HOB
BCH77TB

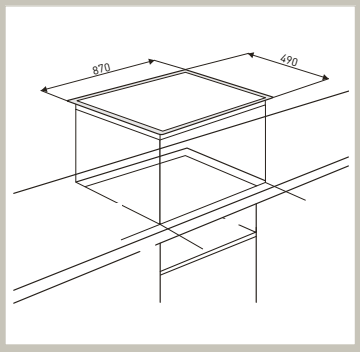

90CM BUILT-IN INDUCTION HOB
BIH90T

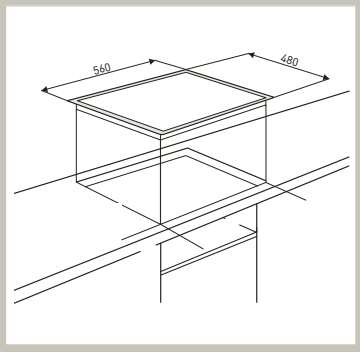

BUILT-IN GAS HOBS
BGH602CSTA/BGH75

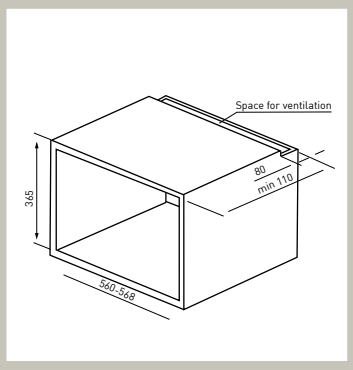

BUILT-IN MICROWAVE
BIM60

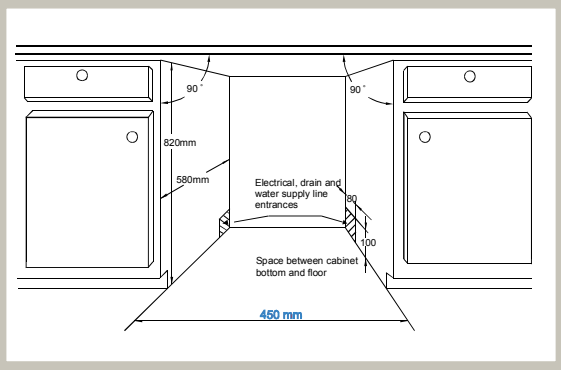

BUILT-IN DISHWASHER
BIDW1062

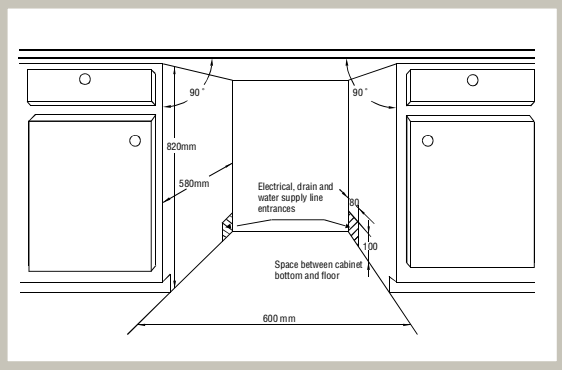

BUILT-IN DISHWASHER
BIDW1462

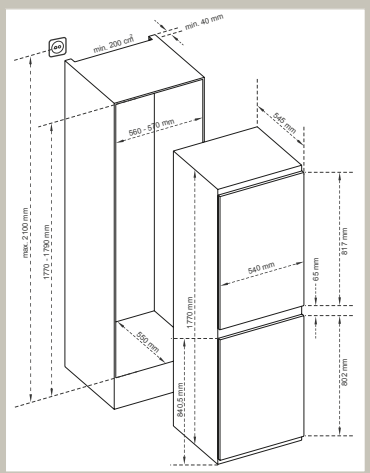

BUILT-IN FRIDGE FREEZER
BIFF5050E

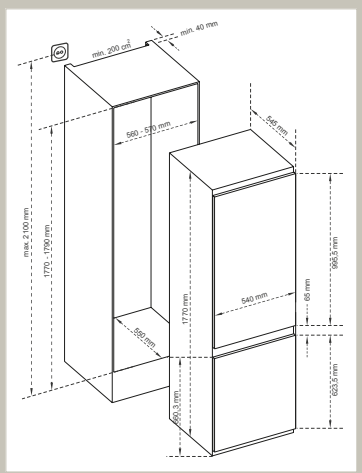

BUILT-IN FRIDGE FREEZER
BIFF7030E

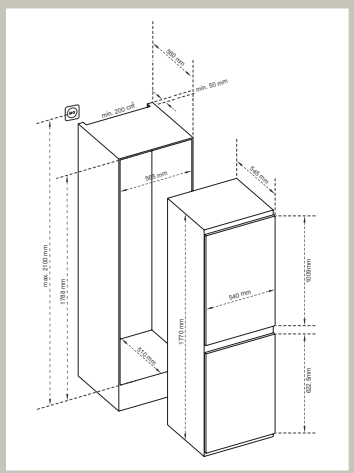

BUILT-IN FRIDGE FREEZER
BIFF7129L

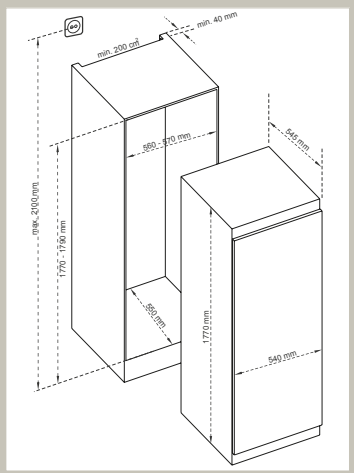

BUILT-IN FRIDGE & FREEZERS
BIL305/BIFZ200

belling®

INSIDE EVERY GREAT HOME

Glen Dimplex GROUP

The Glen Dimplex Group is a global leader in the domestic appliances sector. Many of our premium brands define the categories in which they operate, and are household names around the world.
Our brands have a rich heritage and are bywords for innovation.

THE GAS COMPANY.IE
Call The Showroom : 01 9695000

THE GAS COMPANY.IE
Call The Showroom : 01 9695000

Glen Dimplex Ireland operates a continual improvement policy. Therefore we reserve the right to change the specifications for any product without notice. All dimensions are approximate and images are for illustration purposes only. RRP's are Manufacturers Recommended Retail Prices and correct at time of going to print. The prices are subject to change without notice. All prices shown include a €5 contribution for recycling where applicable. June 2020.

This brochure has been designed and printed in Ireland.